DATA SHEET

DURAPOST PRIMA BOARD

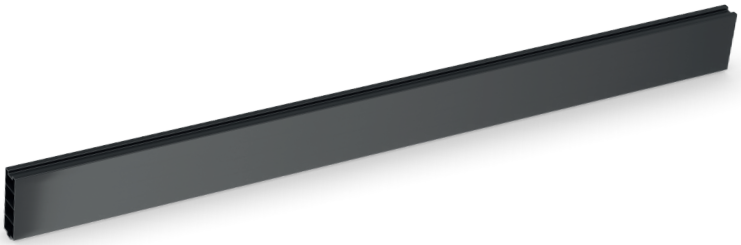

Acoustically tested to 26 dB! See Page 2 for details

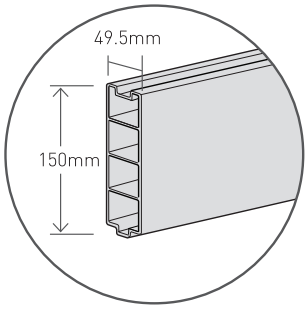

Gravel Board

DESCRIPTION

The DuraPost Prima board is a tongue and groove fencing board, which may be used as a gravel board, or stacked to form a fence panel.

Supplied in 4 matching colours to compliment your fence posts, these boards feature a stylish embossed grain pattern creating a contemporary and durable fence system when stacked between DuraPost 'Classic' posts.

CONSTRUCTION

The DuraPost Prima board is manufactured in the UK from extruded PVC, UV-stabilised to BS EN ISO 21306-1:2019. The design included a 70% recycled PVC core with a virgin, coloured PVC skin.

Over its lifetime, a gradual, minor loss of shine may be visible on the product but this will not have a detrimental effect on the material.

REINFORCING RODS

When stacking Prima boards, a reinforcing rod should be used in every 3rd board and if using as gravel boards to retain earth a reinforcing rod should be used in each board. The rods are manufactured from steel tube, to EN 10255:2004 and hot-dip galvanised to BS EN ISO 1461:2009.

ACOUSTIC TESTING (SEE NEXT PAGE)

BS STANDARD	TESTING RESULTS
ISO 717-1: R_w (C;C_{tr})	26 (-1 ; -2) dB;
EN1793-2 / EN1793-3: DL_R	24 dB(A)

PRODUCTS

PRODUCT CODE	DESCRIPTION
806183A	Anthracite Grey Prima Board | 1.83m
806183B	Sepia Brown Prima Board | 1.83m
806183G	Olive Grey Prima Board | 1.83m
8061833	Black Prima Board | 1.83m
806245A	Anthracite Grey Prima Board | 2.44m
806245B	Sepia Brown Prima Board | 2.44m
806245G	Olive Grey Prima Board | 2.44m
8062453	Black Prima Board | 2.44m
8061101	Galvanised Reinforcing Rod | 1.8m
806183B	Galvanised Reinforcing Rod | 2.44m

FINISHES

Anthracite Grey (RAL 7016)	Sepia Brown (RAL 8014)	Olive Grey (RAL 7002)	Black (RAL 9005)

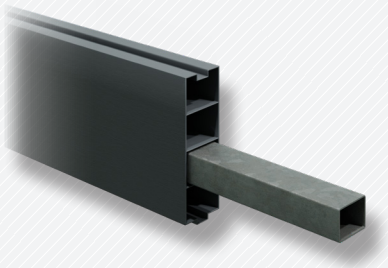

For more information on the DuraPost fence post, see 'DuraPost Specification Sheet.'

WE'RE ALWAYS OPEN AT
birkdalesales.com

Tel: 0345 450 9000 Fax: 0345 450 9085
Email: mail@birkdalesales.com

DATA SHEET

DURAPOST PRIMA BOARD

ACOUSTIC TESTING

Test specimen mounted by: Client
Date of test: 29.1.2026

Description of test specimen and test conditions:

Areas of test specimen:	12	m²
Air humidity in the test rooms:	25	%
Air temp. in the test rooms:	20	°C
Barometric pressure	102	kPa
Source room volume:	102	m³
Receiving room volume:	131	m³

Boards: 50x150mm Tongue and Groove PVC Boards

Posts:
Middle: DuraPost® Classical Fence Post
End: DuraPost® U-Channel and DuraPost® Corner post

Sealing: Posts sealed with silicon

f Frequency Hz	*R* One-third octave dB
50	18,8
63	21,5
80	20,6
100	14,8
125	18,1
160	19,7
200	20,2
250	23,0
315	23,4
400	23,9
500	25,4
630	26,0
800	25,7
1000	25,7
1250	25,2
1600	25,0
2000	23,4
2500	26,3
3150	38,8
4000	44,2
5000	42,4

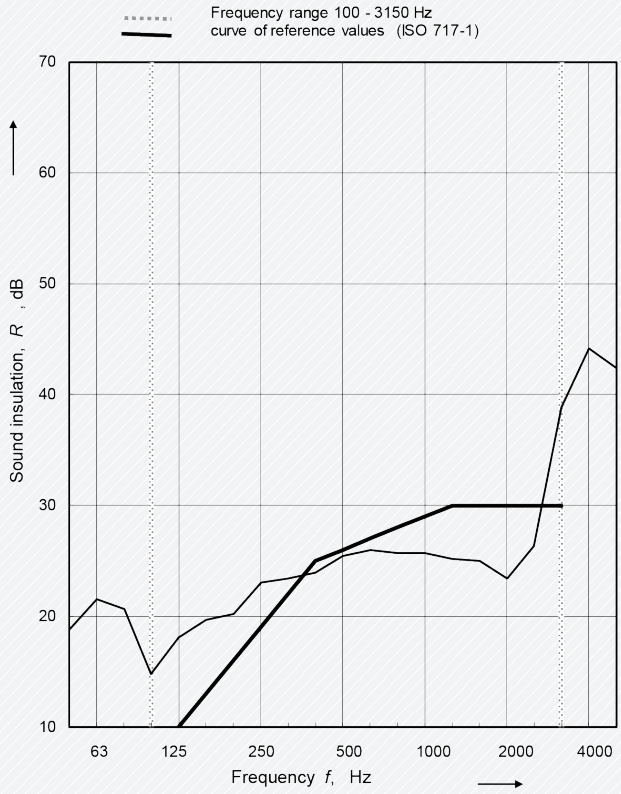

Rating according to ISO 717-1:	According to EN1793-2 ja EN1793-3	According to EN 116272-3-1*
R_w (C;C_{tr}) = 26 (-1 ; -2) dB;	DL_R = 24 dB(A)	DL_R = 25,5*
Evaluation based on laboratory measurement results obtained by an engineering method:	Class: B2	*unaccredited